Service Manual
38 Inch Tiller

(TILLER 38) - S/N 614400101 & Above

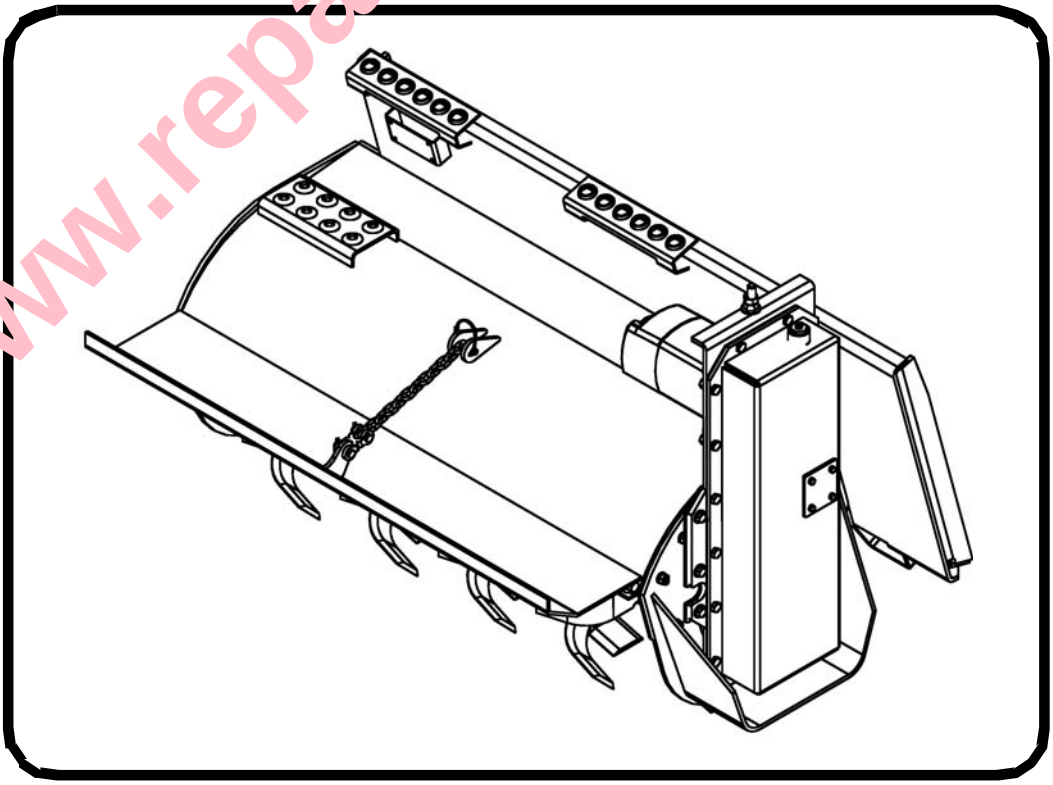

www.repairsadviser.com

6987116 (11-08)

Printed in U.S.A.

© Bobcat Company 2008

www.repairsadviser.com

MAINTENANCE SAFETY

WARNING

Instructions are necessary before operating or servicing machine. Read and understand the Operation & Maintenance Manual, Operator's Handbook and signs (decals) on machine. Follow warnings and instructions in the manuals when making repairs, adjustments or servicing. Check for correct function after adjustments, repairs or service. Untrained operators and failure to follow instructions can cause injury or death.

W-2003-0903

Safety Alert Symbol: This symbol with a warning statement, means: "Warning, be alert! Your safety is involved!" Carefully read the message that follows.

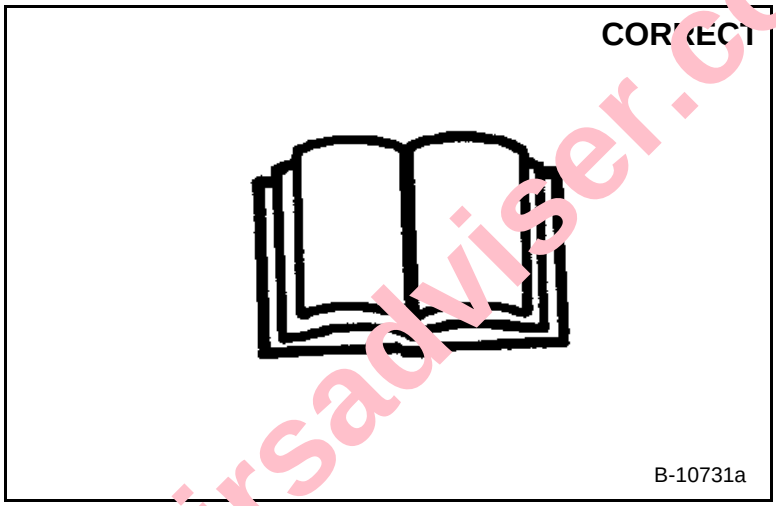

- **Never service attachments / implements without instructions. See Operation & Maintenance Manual and Attachment / Implement Service Manual.**
- **Cleaning and maintenance are required daily.**
- **Never service or adjust attachment / implement with the engine running unless instructed to do so in manual.**
- **Always lower the attachment / implement to the ground before lubricating or servicing.**
- **Avoid contact with leaking hydraulic fluid or diesel fuel under pressure. It can penetrate skin or eyes.**
- **Stop, cool and clean engine of flammable materials before checking fluids.**
- **Keep body, loose objects and clothing away from moving parts, electrical contacts, hot parts and exhaust.**
- **Safety glasses are needed for eye protection from electrical arcs, battery acid, compressed springs, fluids under pressure and flying debris or when tools are used. Use eye protection approved for type of welding.**

www.repairsadviser.com

Bobcat®

www.repairsadviser.com

ALPHABETICAL INDEX

ATTACHMENT STORAGE AND RETURN TO SERVICE . 10-50-1

DELIVERY REPORT III
DRIVE CHAIN 30-10-1

HYDRAULIC MOTOR 20-10-1

IDENTIFICATION AND MACHINE SIGNS (DECALS) IV
INSPECTION. 10-20-1

REGULAR MAINTENANCE ITEMS 10-20-1
REMOVAL AND INSTALLATION OF TINES 10-40-1

SERIAL NUMBER LOCATION III

(TILLER 38) SPECIFICATIONS. SPEC-10-1
TINE SHAFT BEARINGS AND SEALS 30-20-1
TORQUE SPECIFICATIONS FOR BOLTS SPEC-20-1
TROUBLESHOOTING. 10-10-1

www.repairsadviser.com

This and other manuals you can download on the site:
www.repairsadviser.com/Bobcat-38-Inch-Tiller-PDF-Service-Manual